PART M-01 ~ M-23

Diameter
● Shielded ○ non-Shielded
Switching Distance Sn mm
Housing Material
● With LED ○ Without LED

Dimensions (unit: mm)

Operating Voltage
Ripple
No Load Current
Max. Load Current
Leakge Current
Surge Current
Min. Load Current
Voltage Drop
Switching Frequency
Response Time
Switching Hysteresis
Repeat Accuracy
Protection Category
Operating Temperature
Temperature Drift
Short Circuit Protection
Overload Trip Point
Time Delay Before Availability
EMC
Shock / Vibration
Material Active Face

DC 3 wire 10-30V NPN N.O.
DC 3 wire 10-30V NPN N.C.
DC 3 wire 10-30V PNP N.O.
DC 3 wire 10-30V PNP N.C.
DC 4 wire 10-30V Changeover PNP (N.O. & N.C.)
DC 4 wire 10-30V Changeover NPN (N.O. & N.C.)
DC 2 wire 10-60V N.O.
DC 2 wire 10-60V N.C.
DC 3 wire 5-36v NPN N.O.
DC 3 wire 5-36v NPN N.C.
DC 3 wire 5-36v PNP N.O.
DC 3 wire 5-36v PNP N.C.
AC 2 wire 20-250V N.O.
AC 2 wire 20-250V N.C.
AC 2 wire 20-250V N.O. or N.C. Changeable
AC/DC 2 wire 20-250V N.O.
AC/DC 2 wire 20-250V N.C.
AC/DC 2 wire 20-250V N.O. or N.C. Changeable

Remark

Cable 2M (PVC)
Weight

Please put each catalog page in the blank. The specification on the left will help your reading.

MPS SERIES MICRO-PROXIMITY SENSOR DC 3-WIRE NPN/PNP TYPE

MPS-6	MPS-6	MPS-8
○	○	○
1.2mm	1.2mm	1.5mm
Polycarbonate	Polycarbonate	Polycarbonate
●	●	●
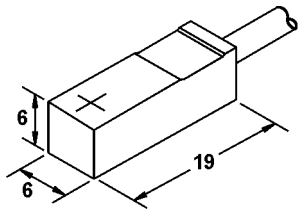	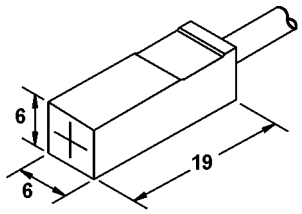	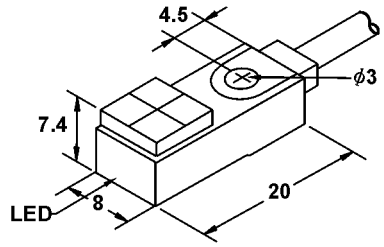
10-30VDC	10-30VDC	10-30VDC
<10%	<10%	<10%
<10mA	<10mA	<10mA
100mA	100mA	100mA
<0.01mA	<0.01mA	<0.01mA
-	-	-
-	-	-
<1.5V	<1.5V	<1.5V
400HZ	400HZ	500HZ
0.5ms/0.5ms	0.5ms/0.5ms	0.5ms/0.5ms
<15%(Sr)	<15%(Sr)	<15%(Sr)
<0.04mm	<0.04mm	<0.04mm
IP67	IP67	IP67
-25°C - +70°C	-25°C - +70°C	-25°C - +70°C
<10%(Sr)	<10%(Sr)	<10%(Sr)
YES	YES	YES
220mA	220mA	220mA
<10ms	<10ms	<10ms
RFI>3V/m / EFT>1KV / ESD>4KV (contact)	RFI>3V/m / EFT>1KV / ESD>4KV (contact)	RFI>3V/m / EFT>1KV / ESD>4KV (contact)
IEC 60947-5-2,Part 7.4.1 / IEC 60947-5-2,Part 7.4.2	IEC 60947-5-2,Part 7.4.1 / IEC 60947-5-2,Part 7.4.2	IEC 60947-5-2,Part 7.4.1 / IEC 60947-5-2,Part 7.4.2
Polycarbonate	Polycarbonate	Polycarbonate

MQP2-661.2N-A3U2F	C	MQP2-661.2N-A3U2T	C	MQP2-881.5N-A3U2F	C
MQP2-661.2N-B3U2F	C	MQP2-661.2N-B3U2T	C	MQP2-881.5N-B3U2F	C
MQP2-661.2P-A3U2F	D	MQP2-661.2P-A3U2T	D	MQP2-881.5P-A3U2F	D
MQP2-661.2P-B3U2F	D	MQP2-661.2P-B3U2T	D	MQP2-881.5P-B3U2F	D

MPS Series Wiring diagram number see page L-10 The following page is same.

2.7φ3x0.15	2.7φ3x0.15	2.7φ3x0.15
approx.10 g	approx.10 g	approx.12 g

MPS SERIES MICRO-PROXIMITY SENSOR DC 3-WIRE NPN/PNP TYPE

MPS-8	MPS-12	MPS-12
○	○	○
1.5mm	2mm	2mm
Polycarbonate	Polycarbonate	Polycarbonate
●	●	●
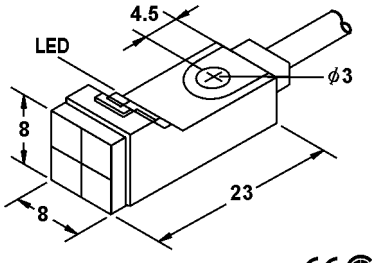	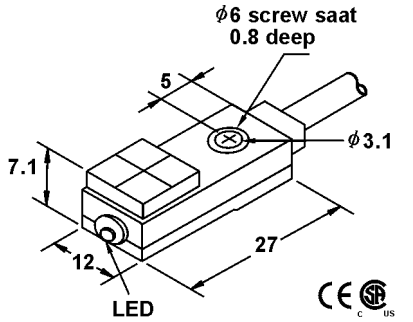	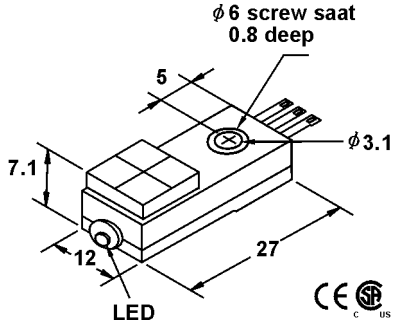
10-30VDC	10-30VDC / 5-36VDC	10-30VDC / 5-36VDC
<10%	<10%	<10%
<10mA	<10mA	<10mA
100mA	100mA / 200mA	100mA / 200mA
<0.01mA	<0.01mA	<0.01mA
-	-	-
-	-	-
<1.5V	<1.5V(10-30V) or <1.0V(5-36v)	<1.5V(10-30V) or <1.0V(5-36v)
500HZ	500HZ	500HZ
0.5ms/0.5ms	0.5ms/0.5ms	0.5ms/0.5ms
<15%(Sr)	<15%(Sr)	<15%(Sr)
<0.04mm	<0.04mm	<0.04mm
IP67	IP67	IP67
-25 ° C - +70 ° C	-25 ° C - +70 ° C	-25 ° C - +70 ° C
<10%(Sr)	<10%(Sr)	<10%(Sr)
YES	YES	YES
220mA	120mA / 220mA	120mA / 220mA
<10ms	<10ms	<10ms
RFI>3V/m / EFT>1KV / ESD>4KV (contact)	RFI>3V/m / EFT>1KV / ESD>4KV (contact)	RFI>3V/m / EFT>1KV / ESD>4KV (contact)
IEC 60947-5-2,Part 7.4.1 / IEC 60947-5-2,Part 7.4.2	IEC 60947-5-2,Part 7.4.1 / IEC 60947-5-2,Part 7.4.2	IEC 60947-5-2,Part 7.4.1 / IEC 60947-5-2,Part 7.4.2
Polycarbonate	Polycarbonate	Polycarbonate
MQP2-881.5N-A3U2T C	MQP2-1202N-A3U2F C	MQP2-1202N-ANU3F E
MQP2-881.5N-B3U2T C	MQP2-1202N-B3U2F C	MQP2-1202N-BNU3F E
MQP2-881.5P-A3U2T D	MQP2-1202P-A3U2F D	MQP2-1202P-ANU3F F
MQP2-881.5P-B3U2T D	MQP2-1202P-B3U2F D	MQP2-1202P-BNU3F F
	C IQP2-1202N-A3U2F	E IQP2-1202N-ANU3F
	C IQP2-1202N-B3U2F	E IQP2-1202N-BNU3F
	D IQP2-1202P-A3U2F	F IQP2-1202P-ANU3F
	D IQP2-1202P-B3U2F	F IQP2-1202P-BNU3F
MPS Series Wiring diagram number see page L-10 The following page is same.		MCP2-1202N-ANU3F 3 PIN connector type see page L-10
2.7φ3x0.15	3φ3x0.15	
approx.12 g	approx.20 g	approx.5 g

MPS SERIES MICRO-PROXIMITY SENSOR DC 3-WIRE NPN/PNP TYPE

MPS-15	MPS-15	MPS-15
○	○	○
4mm	4mm	6.4mm
Polycaribonate	Polycaribonate	Polycaribonate
●	●	●
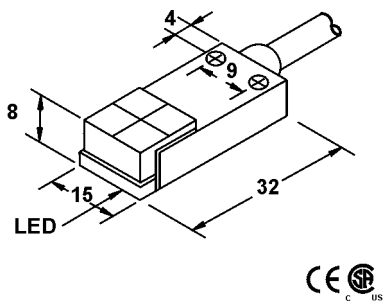	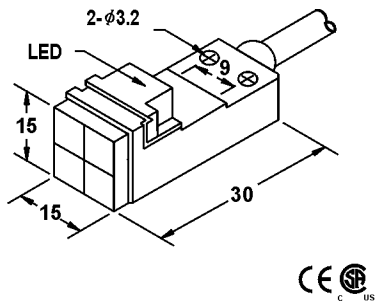	*: Long sensing range. 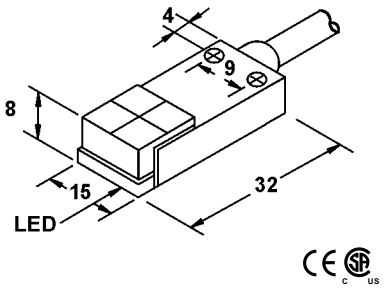
10-30VDC / 5-36VDC	10-30VDC / 5-36VDC	5-36VDC
<10%	<10%	<10%
<10mA	<10mA	<10mA
100mA / 200mA	100mA / 200mA	200mA
<0.01mA	<0.01mA	<0.01mA
-	-	-
-	-	-
<1.5V(10-30) or<1.0V(5-36)	<1.5V(10-30) or<1.0V(5-36)	<1.0V
250HZ	250HZ	250HZ
0.5ms/0.5ms	0.5ms/0.5ms	0.5ms/0.5ms
<15%(Sr)	<15%(Sr)	<15%(Sr)
<0.04mm	<0.04mm	<0.04mm
IP67	IP67	IP67
-25°C - +70°C	-25°C - +70°C	-25°C - +70°C
<10%(Sr)	<10%(Sr)	<10%(Sr)
YES	YES	YES
120mA / 220mA	120mA / 220mA	220mA
<10ms	<10ms	<10ms
RFI>3V/m / EFT>1KV / ESD>4KV (contact)	RFI>3V/m / EFT>1KV / ESD>4KV (contact)	RFI>3V/m / EFT>1KV / ESD>4KV (contact)
IEC 60947-5-2,Part 7.4.1 / IEC 60947-5-2,Part 7.4.2	IEC 60947-5-2,Part 7.4.1 / IEC 60947-5-2,Part 7.4.2	IEC 60947-5-2,Part 7.4.1 / IEC 60947-5-2,Part 7.4.2
Polycaribonate	Polycaribonate	Polycaribonate
MQP2-1504N-A3U2F C	MQP2-1504N-A3U2T C	
MQP2-1504N-B3U2F C	MQP2-1504N-B3U2T C	
MQP2-1504P-A3U2F D	MQP2-1504P-A3U2T D	
MQP2-1504P-B3U2F D	MQP2-1504P-B3U2T D	
C IQP2-1504N-A3U2F	C IQP2-1504N-A3U2T	IQP2-156.4N-A3U2F C
C IQP2-1504N-B3U2F	C IQP2-1504N-B3U2T	IQP2-156.4N-B3U2F C
D IQP2-1504P-A3U2F	D IQP2-1504P-A3U2T	IQP2-156.4P-A3U2F D
D IQP2-1504P-B3U2F	D IQP2-1504P-B3U2T	IQP2-156.4P-B3U2F D
MPS Series Wiring diagram number see page L-10. The following page is same.		
3φ3x0.15	3φ3x0.15	3φ3x0.15
approx.20 g	approx.20 g	approx.20 g

MPS SERIES MICRO-PROXIMITY SENSOR DC 3-WIRE NPN/PNP TYPE

MPS-15	MPS-10	
○	○	
6.4mm	2.0mm	
Polycarbonate	Polycarbonate	
●	●	
*: Long sensing range. 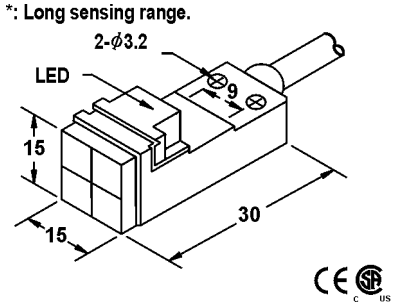 	ϕ 6 screw saat 0.8 deep 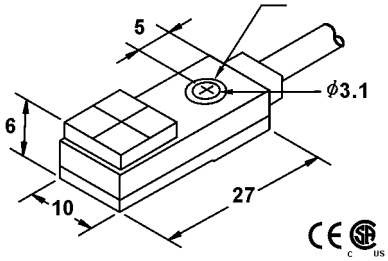 	
5-36VDC	10-30VDC	
<10%	<10%	
<10mA	<10mA	
200mA	100mA	
<0.01mA	<0.01mA	
-	-	
-	-	
<1.0V	<1.5V	
250HZ	250HZ	
0.5ms	0.5ms/0.5ms	
<15%(Sr)	<15%(Sr)	
<0.04mm	<0.04mm	
IP67	IP67	
-25°C - +70°C	-25°C - +70°C	
<10%(Sr)	<10%(Sr)	
YES	YES	
220mA	120mA / 220mA	
<10ms	<10ms	
RFI>3V/m / EFT>1KV / ESD>4KV (contact)	RFI>3V/m / EFT>1KV / ESD>4KV (contact)	
IEC 60947-5-2,Part 7.4.1 / IEC 60947-5-2,Part 7.4.2	IEC 60947-5-2,Part 7.4.1 / IEC 60947-5-2,Part 7.4.2	
Polycarbonate	Polycarbonate	
	MQP2-1002N-A3U2F C	
	MQP2-1002N-B3U2F C	
	MQP2-1002P-A3U2F D	
	MQP2-1002P-B3U2F D	
IQP2-156.4N-A3U2T C		
IQP2-156.4N-B3U2T C		
IQP2-156.4P-A3U2T D		
IQP2-156.4P-B3U2T D		
MPS Series Wiring diagram number see page L-10 The following page is same.		
3ϕ3x0.15	3ϕ3x0.15	
approx.20 g	approx.20 g	